Tapered roller bearing 30315 NACHI

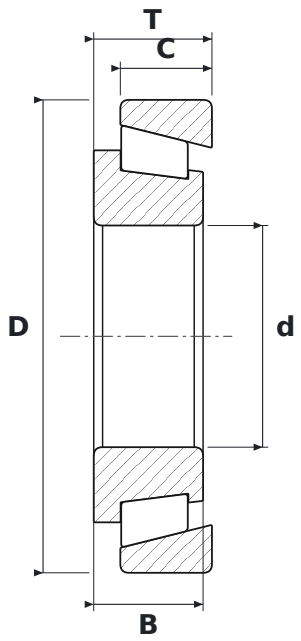

DIMENSIONS

d	bore diameter	**75 mm**
D	outside diameter	**160 mm**
T	total width	**40 mm**
B	inner ring width	**37 mm**
C	outer ring width	**31 mm**

SPECIFICATIONS

Manufacturer	**NACHI**
Manufacturer designation	**30315**
B – inner ring width	**37 mm**
C – outer ring width	**31 mm**
Rolling elements	**single-row tapered roller bearing**
Seal	**open – no seals**