Tapered roller bearing 30316 FAG

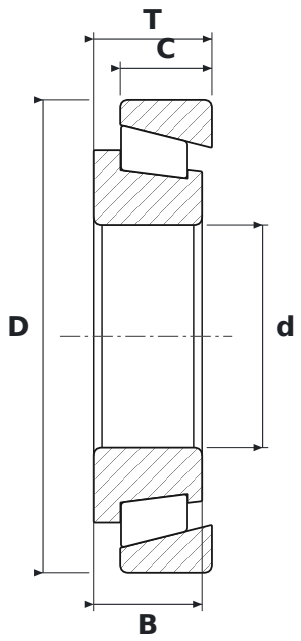

DIMENSIONS

d	bore diameter	**80 mm**
D	outside diameter	**170 mm**
T	total width	**42.5 mm**
B	inner ring width	**39 mm**
C	outer ring width	**33 mm**

SPECIFICATIONS

Manufacturer	**FAG**
Manufacturer designation	**30316**
B – inner ring width	**39 mm**
C – outer ring width	**33 mm**
Rolling elements	**single-row tapered roller bearing**
Seal	**open – no seals**
Mass	**4.3 kg**