Tapered roller bearing 30317 SKF

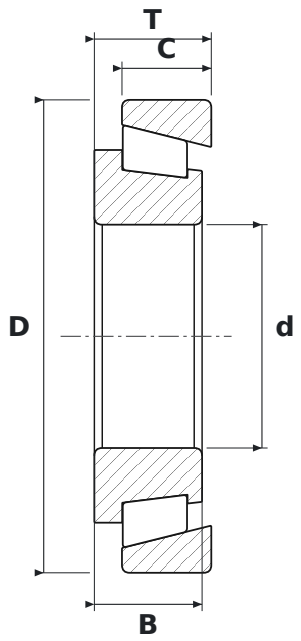

DIMENSIONS

d	bore diameter	**85 mm**
D	outside diameter	**180 mm**
T	total width	**44.5 mm**
B	inner ring width	**41 mm**
C	outer ring width	**34 mm**

SPECIFICATIONS

Manufacturer	**SKF**
Manufacturer designation	**30317**
B – inner ring width	**41 mm**
C – outer ring width	**34 mm**
Rolling elements	**single-row tapered roller bearing**
Seal	**open – no seals**