Tapered roller bearing 30319 NKE

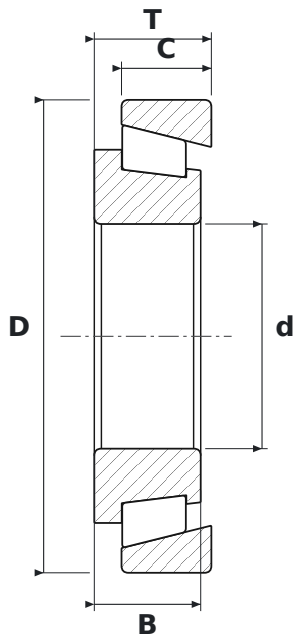

DIMENSIONS

d	bore diameter	**95 mm**
D	outside diameter	**200 mm**
T	total width	**49.5 mm**
B	inner ring width	**45 mm**
C	outer ring width	**38 mm**

SPECIFICATIONS

Manufacturer	**NKE**
Manufacturer designation	**30319**
B – inner ring width	**45 mm**
C – outer ring width	**38 mm**
Rolling elements	**single-row tapered roller bearing**
Seal	**open – no seals**
Mass	**6.77 kg**