Tapered roller bearing 30319 D KOYO

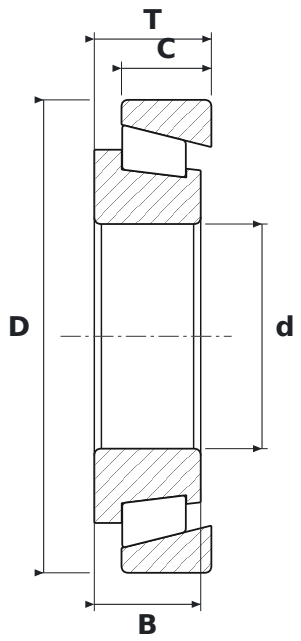

DIMENSIONS

d	bore diameter	**95 mm**
D	outside diameter	**200 mm**
T	total width	**49.5 mm**
B	inner ring width	**45 mm**
C	outer ring width	**38 mm**

SPECIFICATIONS

Manufacturer	**KOYO**
Manufacturer designation	**30319 D**
B – inner ring width	**45 mm**
C – outer ring width	**38 mm**
Rolling elements	**single-row tapered roller bearing**
Seal	**open – no seals**