CASTOMER

DATASHEET

Tapered roller bearing 31309 /CL7C SKF

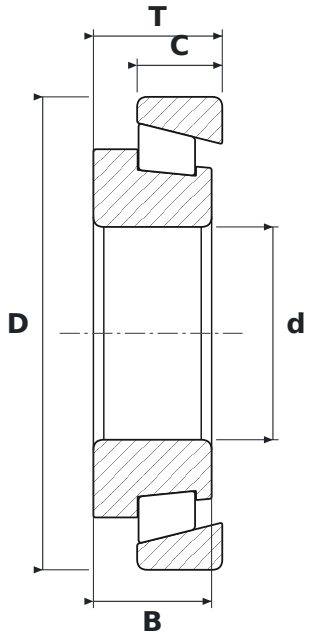

DIMENSIONS

d	bore diameter	**45 mm**
D	outside diameter	**100 mm**
T	total width	**27.25 mm**
B	inner ring width	**25 mm**
C	outer ring width	**18 mm**

SPECIFICATIONS

Manufacturer	**SKF**
Manufacturer designation	**31309 /CL7C**
B – inner ring width	**25 mm**
C – outer ring width	**18 mm**
Rolling elements	**single-row tapered roller bearing**
Seal	**open – no seals**