CASTOMER

DATASHEET

Tapered roller bearing 31311 SKF

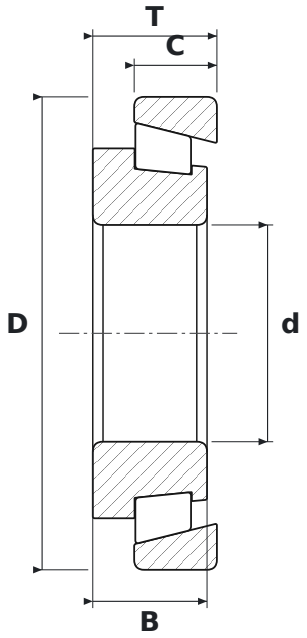

DIMENSIONS

d	bore diameter	**55 mm**
D	outside diameter	**120 mm**
T	total width	**31.5 mm**
B	inner ring width	**29 mm**
C	outer ring width	**21 mm**

SPECIFICATIONS

Manufacturer	**SKF**
Manufacturer designation	**31311**
B – inner ring width	**29 mm**
C – outer ring width	**21 mm**
Rolling elements	**single-row tapered roller bearing**
Seal	**open – no seals**