Tapered roller bearing 31312 FAG

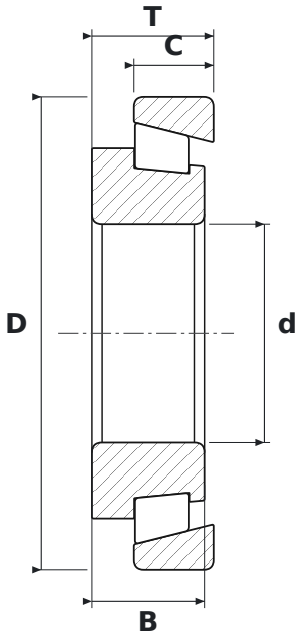

DIMENSIONS

d	bore diameter	**60 mm**
D	outside diameter	**130 mm**
T	total width	**33.5 mm**
B	inner ring width	**31 mm**
C	outer ring width	**22 mm**

SPECIFICATIONS

Manufacturer	**FAG**
Manufacturer designation	**31312**
B – inner ring width	**31 mm**
C – outer ring width	**22 mm**
Rolling elements	**single-row tapered roller bearing**
Seal	**open – no seals**
Mass	**1.94 kg**