CASTOMER

DATASHEET

Tapered roller bearing 31313-9X245 TIMKEN

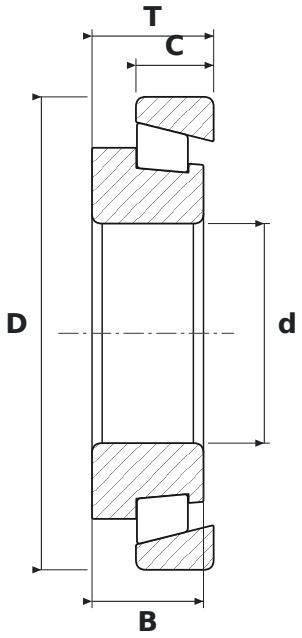

DIMENSIONS

d	bore diameter	**65 mm**
D	outside diameter	**140 mm**
T	total width	**36 mm**
B	inner ring width	**33 mm**
C	outer ring width	**23 mm**

SPECIFICATIONS

Manufacturer	**TIMKEN**
Manufacturer designation	**31313-9X245**
B – inner ring width	**33 mm**
C – outer ring width	**23 mm**
Rolling elements	**single-row tapered roller bearing**
Seal	**open – no seals**