CASTOMER

DATASHEET

# Tapered roller bearing 31314 CL7A SKF

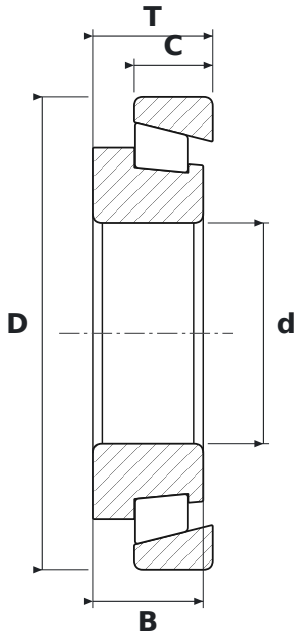


## DIMENSIONS

| | | |
|---|---|---|
| **d** | bore diameter | **70 mm** |
| **D** | outside diameter | **150 mm** |
| **T** | total width | **38 mm** |
| **B** | inner ring width | **35 mm** |
| **C** | outer ring width | **25 mm** |

## SPECIFICATIONS

| | |
|---|---|
| Manufacturer | **SKF** |
| Manufacturer designation | **31314 CL7A** |
| B – inner ring width | **35 mm** |
| C – outer ring width | **25 mm** |
| Rolling elements | **single-row tapered roller bearing** |
| Seal | **open – no seals** |
| Mass | **2.868 kg** |