Tapered roller bearing 31316 ZEN

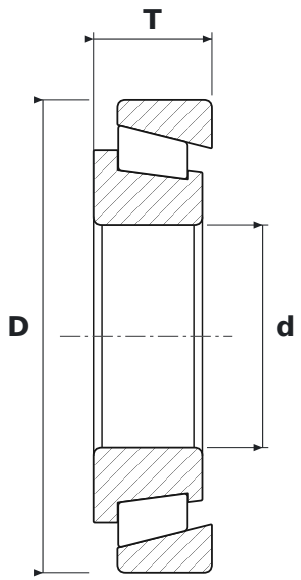

DIMENSIONS

d	bore diameter	**80 mm**
D	outside diameter	**170 mm**
T	total width	**42.5 mm**

SPECIFICATIONS

Manufacturer	**ZEN**
Manufacturer designation	**31316**
Rolling elements	**single-row tapered roller bearing**
Seal	**open – no seals**
Mass	**4.161 kg**