Tapered roller bearing 31322 NKE

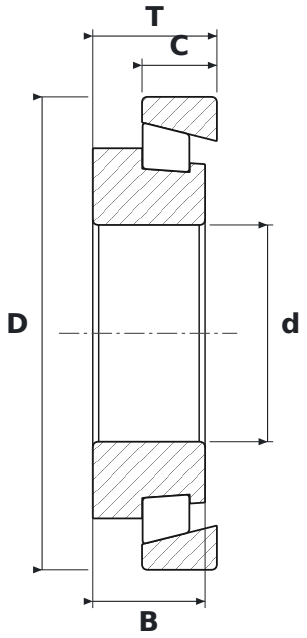

DIMENSIONS

d	bore diameter	**110 mm**
D	outside diameter	**240 mm**
T	total width	**63 mm**
B	inner ring width	**57 mm**
C	outer ring width	**38 mm**

SPECIFICATIONS

Manufacturer	**NKE**
Manufacturer designation	**31322**
B – inner ring width	**57 mm**
C – outer ring width	**38 mm**
Rolling elements	**single-row tapered roller bearing**
Seal	**open – no seals**