Tapered roller bearing 32009 X FAG

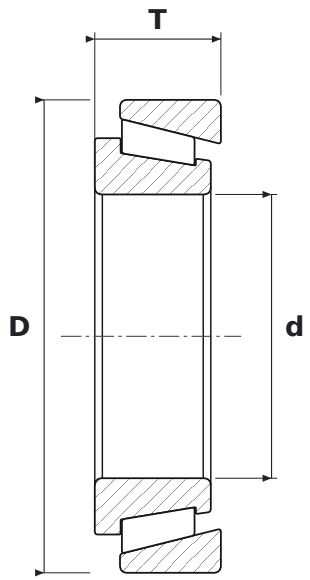

DIMENSIONS

d	bore diameter	**45 mm**
D	outside diameter	**75 mm**
T	total width	**20 mm**

SPECIFICATIONS

Manufacturer	**FAG**
Manufacturer designation	**32009 X**
Rolling elements	**single-row tapered roller bearing**
Seal	**open – no seals**