Tapered roller bearing 32009XM-90KM1 TIMKEN

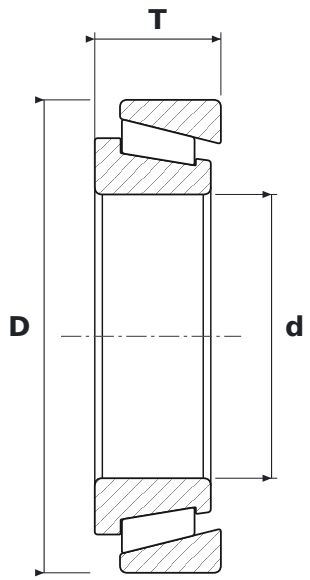

DIMENSIONS

d	bore diameter	**45 mm**
D	outside diameter	**75 mm**
T	total width	**20 mm**

SPECIFICATIONS

Manufacturer	**TIMKEN**
Manufacturer designation	**32009XM-90KM1**
Rolling elements	**single-row tapered roller bearing**
M	**machined brass cage**
M1	**manufacturer design code**
Seal	**open – no seals**