Tapered roller bearing 32010 X SKF

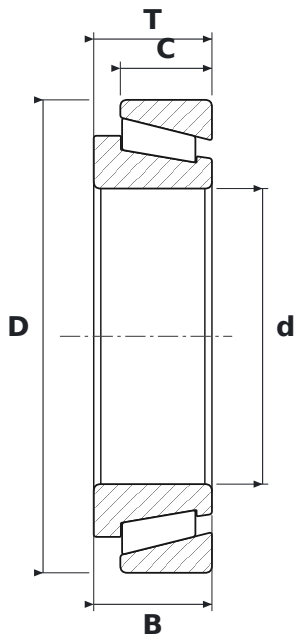

DIMENSIONS

d	bore diameter	**50 mm**
D	outside diameter	**80 mm**
T	total width	**20 mm**
B	inner ring width	**20 mm**
C	outer ring width	**15.5 mm**

SPECIFICATIONS

Manufacturer	**SKF**
Manufacturer designation	**32010 X**
B – inner ring width	**20 mm**
C – outer ring width	**15.5 mm**
Rolling elements	**single-row tapered roller bearing**
Seal	**open – no seals**
Mass	**0.378 kg**