Tapered roller bearing 32011 .AP6X SNR

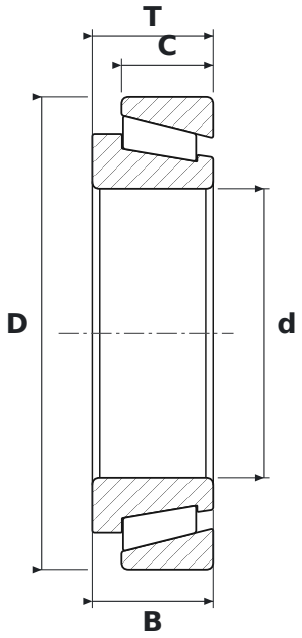

DIMENSIONS

d	bore diameter	**55 mm**
D	outside diameter	**90 mm**
T	total width	**23 mm**
B	inner ring width	**23 mm**
C	outer ring width	**17.5 mm**

SPECIFICATIONS

Manufacturer	**SNR**
Manufacturer designation	**32011 .AP6X**
B – inner ring width	**23 mm**
C – outer ring width	**17.5 mm**
Rolling elements	**single-row tapered roller bearing**
P6	**tolerance class P6**
Seal	**open – no seals**