CASTOMER

DATASHEET

Tapered roller bearing 32208 ZEN

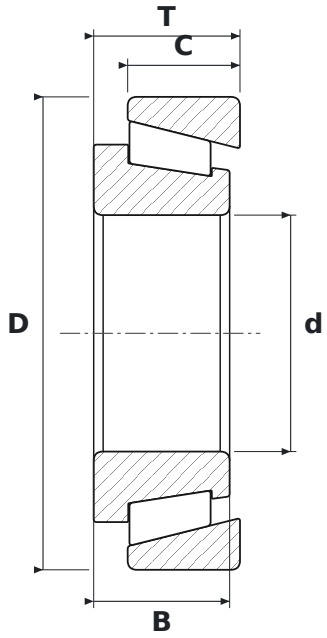

DIMENSIONS

d	bore diameter	**40 mm**
D	outside diameter	**80 mm**
T	total width	**24.75 mm**
B	inner ring width	**23 mm**
C	outer ring width	**19 mm**

SPECIFICATIONS

Manufacturer	**ZEN**
Manufacturer designation	**32208**
B – inner ring width	**23 mm**
C – outer ring width	**19 mm**
Rolling elements	**single-row tapered roller bearing**
Seal	**open – no seals**