CASTOMER

DATASHEET

Tapered roller bearing 32218 U NTN

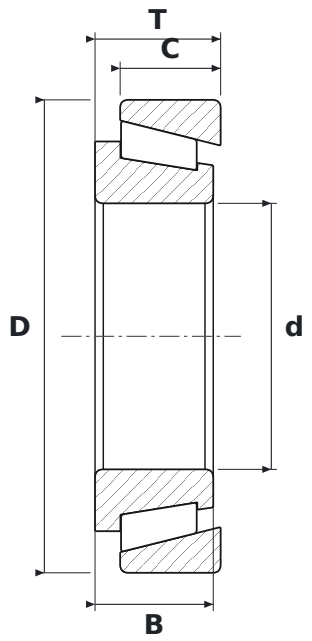

DIMENSIONS

d	bore diameter	**90 mm**
D	outside diameter	**160 mm**
T	total width	**42.5 mm**
B	inner ring width	**40 mm**
C	outer ring width	**34 mm**

SPECIFICATIONS

Manufacturer	**NTN**
Manufacturer designation	**32218 U**
B – inner ring width	**40 mm**
C – outer ring width	**34 mm**
Rolling elements	**single-row tapered roller bearing**
Seal	**open – no seals**
Mass	**3.54 kg**