Tapered roller bearing 32226 U NTN

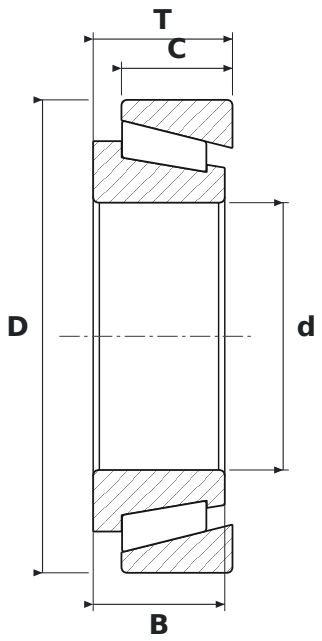

DIMENSIONS

d	bore diameter	**130 mm**
D	outside diameter	**230 mm**
T	total width	**67.75 mm**
B	inner ring width	**64 mm**
C	outer ring width	**54 mm**

SPECIFICATIONS

Manufacturer	**NTN**
Manufacturer designation	**32226 U**
B – inner ring width	**64 mm**
C – outer ring width	**54 mm**
Rolling elements	**single-row tapered roller bearing**
Seal	**open – no seals**
Mass	**11.25 kg**