Tapered roller bearing 32232 NACHI

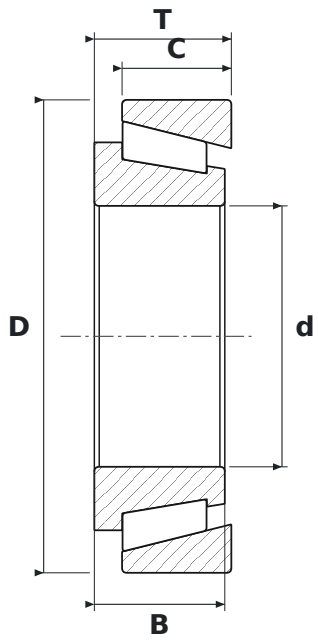

DIMENSIONS

d	bore diameter	**160 mm**
D	outside diameter	**290 mm**
T	total width	**84 mm**
B	inner ring width	**80 mm**
C	outer ring width	**67 mm**

SPECIFICATIONS

Manufacturer	**NACHI**
Manufacturer designation	**32232**
B – inner ring width	**80 mm**
C – outer ring width	**67 mm**
Rolling elements	**single-row tapered roller bearing**
Seal	**open – no seals**