Tapered roller bearing 32234 SKF

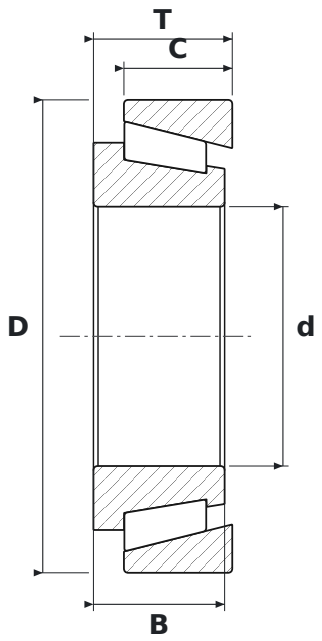

DIMENSIONS

d	bore diameter	**170 mm**
D	outside diameter	**310 mm**
T	total width	**91 mm**
B	inner ring width	**86 mm**
C	outer ring width	**71 mm**

SPECIFICATIONS

Manufacturer	**SKF**
Manufacturer designation	**32234**
B – inner ring width	**86 mm**
C – outer ring width	**71 mm**
Rolling elements	**single-row tapered roller bearing**
Seal	**open – no seals**
Mass	**28.67 kg**