CASTOMER

DATASHEET

Tapered roller bearing 32238 NKE

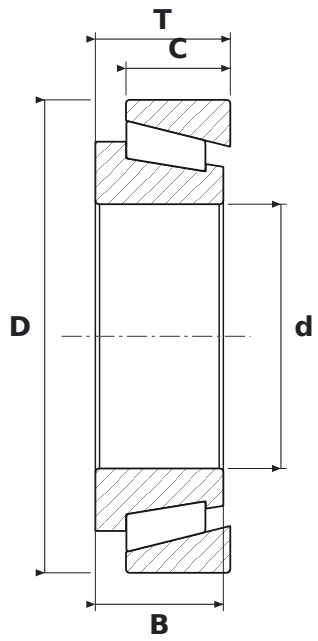

DIMENSIONS

d	bore diameter	**190 mm**
D	outside diameter	**340 mm**
T	total width	**97 mm**
B	inner ring width	**92 mm**
C	outer ring width	**75 mm**

SPECIFICATIONS

Manufacturer	**NKE**
Manufacturer designation	**32238**
B – inner ring width	**92 mm**
C – outer ring width	**75 mm**
Rolling elements	**single-row tapered roller bearing**
Seal	**open – no seals**