CASTOMER

DATASHEET

Tapered roller bearing 32240 SKF

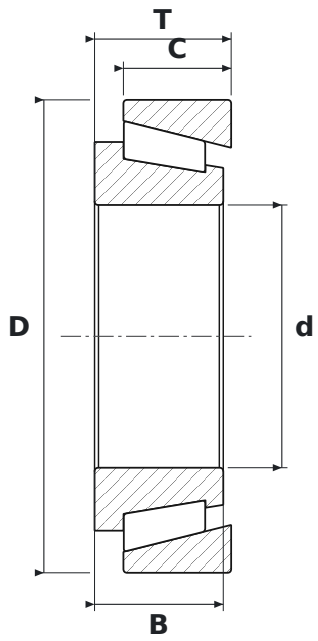

DIMENSIONS

d	bore diameter	**200 mm**
D	outside diameter	**360 mm**
T	total width	**104 mm**
B	inner ring width	**98 mm**
C	outer ring width	**82 mm**

SPECIFICATIONS

Manufacturer	**SKF**
Manufacturer designation	**32240**
B – inner ring width	**98 mm**
C – outer ring width	**82 mm**
Rolling elements	**single-row tapered roller bearing**
Seal	**open – no seals**
Mass	**42.4 kg**