Tapered roller bearing 32244 SKF

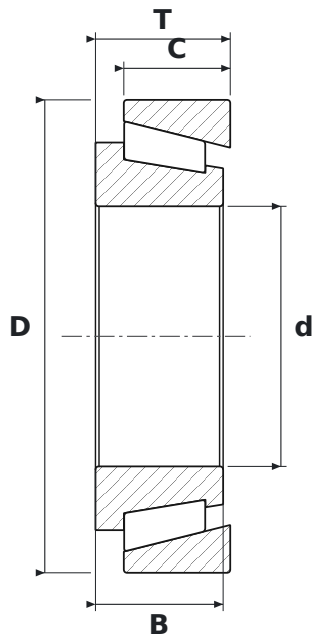

DIMENSIONS

d	bore diameter	**220 mm**
D	outside diameter	**400 mm**
T	total width	**114 mm**
B	inner ring width	**108 mm**
C	outer ring width	**90 mm**

SPECIFICATIONS

Manufacturer	**SKF**
Manufacturer designation	**32244**
B – inner ring width	**108 mm**
C – outer ring width	**90 mm**
Rolling elements	**single-row tapered roller bearing**
Seal	**open – no seals**