CASTOMER

DATASHEET

Tapered roller bearing 32309 ZEN

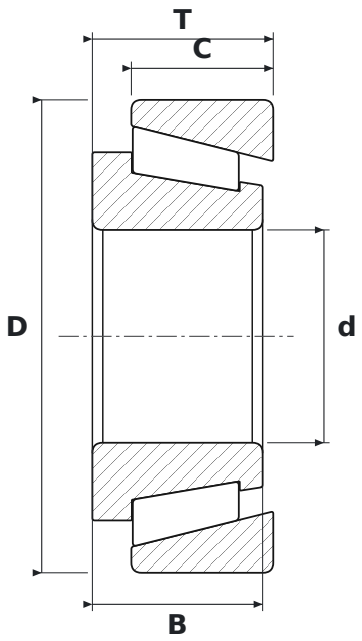

DIMENSIONS

d	bore diameter	**45 mm**
D	outside diameter	**100 mm**
T	total width	**38.25 mm**
B	inner ring width	**36 mm**
C	outer ring width	**30 mm**

SPECIFICATIONS

Manufacturer	**ZEN**
Manufacturer designation	**32309**
B – inner ring width	**36 mm**
C – outer ring width	**30 mm**
Rolling elements	**single-row tapered roller bearing**
Seal	**open – no seals**
Mass	**1.43 kg**