Tapered roller bearing 33010 /Q SKF

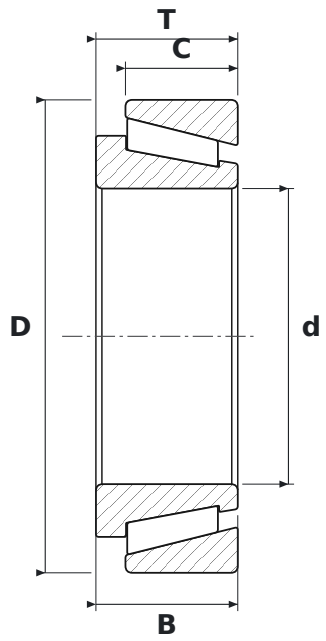

DIMENSIONS

d	bore diameter	**50 mm**
D	outside diameter	**80 mm**
T	total width	**24 mm**
B	inner ring width	**24 mm**
C	outer ring width	**19 mm**

SPECIFICATIONS

Manufacturer	**SKF**
Manufacturer designation	**33010 /Q**
B – inner ring width	**24 mm**
C – outer ring width	**19 mm**
Rolling elements	**single-row tapered roller bearing**
Seal	**open – no seals**