Tapered roller bearing 33019 SKF

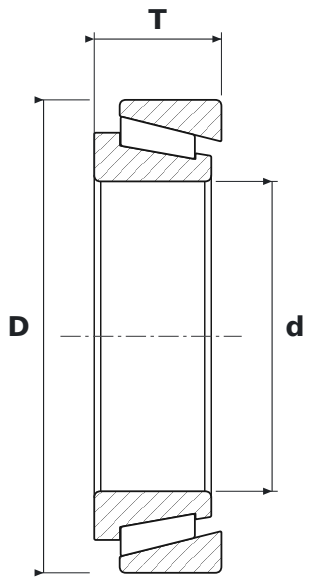

DIMENSIONS

d	bore diameter	**95 mm**
D	outside diameter	**145 mm**
T	total width	**39 mm**

SPECIFICATIONS

Manufacturer	**SKF**
Manufacturer designation	**33019**
Rolling elements	**single-row tapered roller bearing**
Seal	**open – no seals**
Mass	**2.3 kg**