Tapered roller bearing 33022 FAG

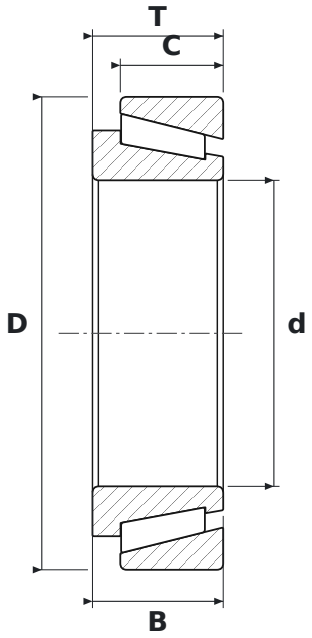

DIMENSIONS

d	bore diameter	**110 mm**
D	outside diameter	**170 mm**
T	total width	**47 mm**
B	inner ring width	**47 mm**
C	outer ring width	**37 mm**

SPECIFICATIONS

Manufacturer	**FAG**
Manufacturer designation	**33022**
B – inner ring width	**47 mm**
C – outer ring width	**37 mm**
Rolling elements	**single-row tapered roller bearing**
Seal	**open – no seals**
Mass	**3.89 kg**