Tapered roller bearing 33109 SKF

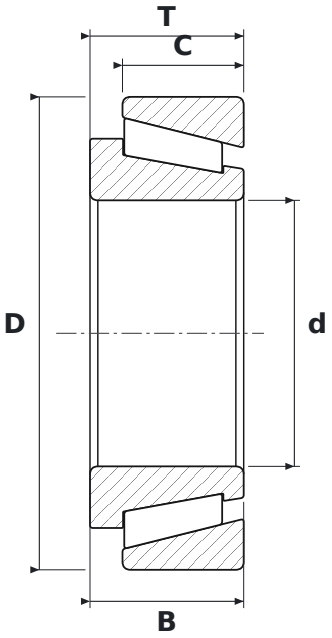

DIMENSIONS

d	bore diameter	**45 mm**
D	outside diameter	**80 mm**
T	total width	**26 mm**
B	inner ring width	**26 mm**
C	outer ring width	**20.5 mm**

SPECIFICATIONS

Manufacturer	**SKF**
Manufacturer designation	**33109**
B – inner ring width	**26 mm**
C – outer ring width	**20.5 mm**
Rolling elements	**single-row tapered roller bearing**
Seal	**open – no seals**