Tapered roller bearing 33111 Q SKF

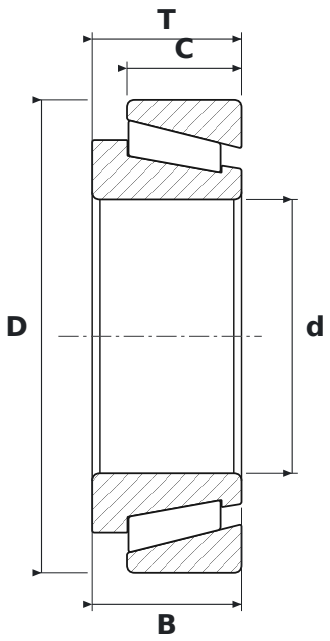

DIMENSIONS

d	bore diameter	**55 mm**
D	outside diameter	**95 mm**
T	total width	**30 mm**
B	inner ring width	**30 mm**
C	outer ring width	**23 mm**

SPECIFICATIONS

Manufacturer	**SKF**
Manufacturer designation	**33111 Q**
B – inner ring width	**30 mm**
C – outer ring width	**23 mm**
Rolling elements	**single-row tapered roller bearing**
Seal	**open – no seals**
Mass	**0.854 kg**