Tapered roller bearing 33112 NKE

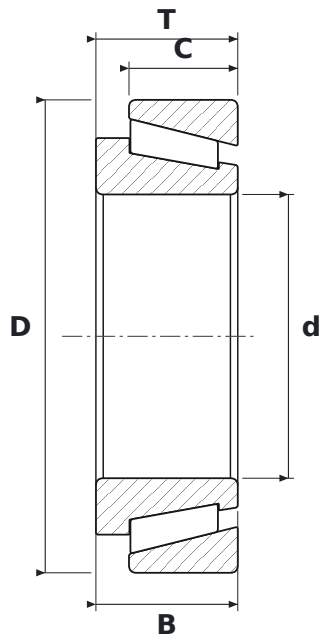

DIMENSIONS

d	bore diameter	**60 mm**
D	outside diameter	**100 mm**
T	total width	**30 mm**
B	inner ring width	**30 mm**
C	outer ring width	**23 mm**

SPECIFICATIONS

Manufacturer	**NKE**
Manufacturer designation	**33112**
B – inner ring width	**30 mm**
C – outer ring width	**23 mm**
Rolling elements	**single-row tapered roller bearing**
Seal	**open – no seals**