Tapered roller bearing 33114 FAG

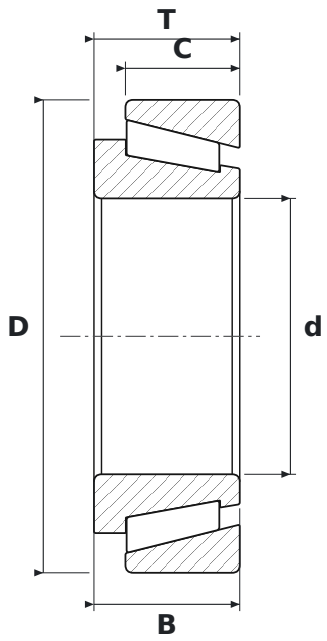

DIMENSIONS

d	bore diameter	**70 mm**
D	outside diameter	**120 mm**
T	total width	**37 mm**
B	inner ring width	**37 mm**
C	outer ring width	**29 mm**

SPECIFICATIONS

Manufacturer	**FAG**
Manufacturer designation	**33114**
B – inner ring width	**37 mm**
C – outer ring width	**29 mm**
Rolling elements	**single-row tapered roller bearing**
Seal	**open – no seals**