CASTOMER

DATASHEET

Tapered roller bearing 33118 U NTN

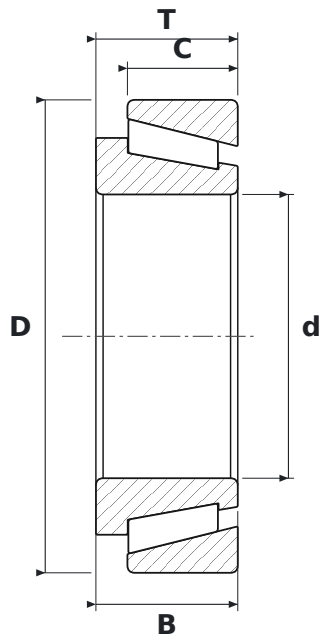

DIMENSIONS

d	bore diameter	**90 mm**
D	outside diameter	**150 mm**
T	total width	**45 mm**
B	inner ring width	**45 mm**
C	outer ring width	**35 mm**

SPECIFICATIONS

Manufacturer	**NTN**
Manufacturer designation	**33118 U**
B – inner ring width	**45 mm**
C – outer ring width	**35 mm**
Rolling elements	**single-row tapered roller bearing**
Seal	**open – no seals**
Mass	**3.14 kg**