Tapered roller bearing 33206 SKF

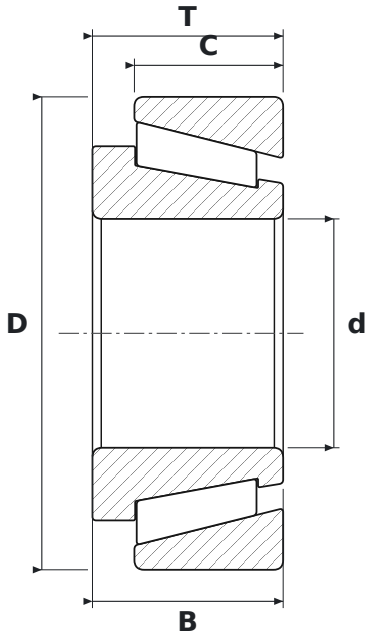

DIMENSIONS

d	bore diameter	**30 mm**
D	outside diameter	**62 mm**
T	total width	**25 mm**
B	inner ring width	**25 mm**
C	outer ring width	**19.5 mm**

SPECIFICATIONS

Manufacturer	**SKF**
Manufacturer designation	**33206**
B – inner ring width	**25 mm**
C – outer ring width	**19.5 mm**
Rolling elements	**single-row tapered roller bearing**
Seal	**open – no seals**