Tapered roller bearing 33214 SKF

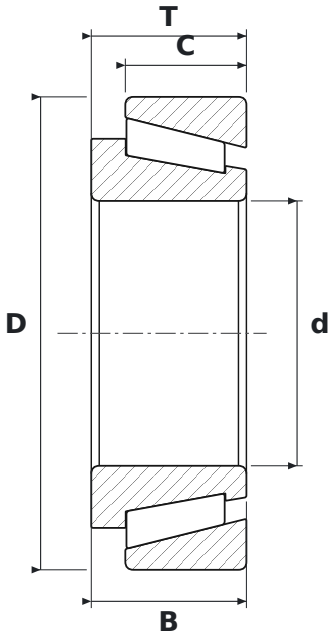

DIMENSIONS

d	bore diameter	**70 mm**
D	outside diameter	**125 mm**
T	total width	**41 mm**
B	inner ring width	**41 mm**
C	outer ring width	**32 mm**

SPECIFICATIONS

Manufacturer	**SKF**
Manufacturer designation	**33214**
B – inner ring width	**41 mm**
C – outer ring width	**32 mm**
Rolling elements	**single-row tapered roller bearing**
Seal	**open – no seals**
Mass	**2.05 kg**