CASTOMER

DATASHEET

Tapered roller bearing 33216 U NTN

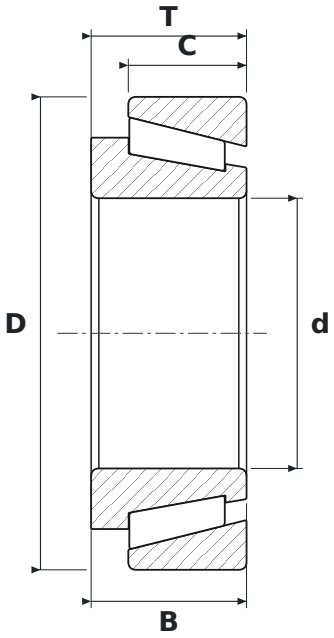

DIMENSIONS

d	bore diameter	**80 mm**
D	outside diameter	**140 mm**
T	total width	**46 mm**
B	inner ring width	**46 mm**
C	outer ring width	**35 mm**

SPECIFICATIONS

Manufacturer	**NTN**
Manufacturer designation	**33216 U**
B – inner ring width	**46 mm**
C – outer ring width	**35 mm**
Rolling elements	**single-row tapered roller bearing**
Seal	**open – no seals**