Tapered roller bearing 3780/20 KOYO

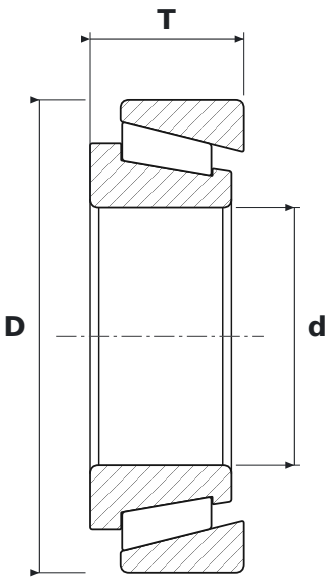

DIMENSIONS

d	bore diameter	**50.8 mm**
D	outside diameter	**93.26 mm**
T	total width	**30.3 mm**

SPECIFICATIONS

Manufacturer	**KOYO**
Manufacturer designation	**3780/20**
Rolling elements	**tapered roller bearing**
Seal	**open – no seals**