Tapered roller bearing 39585/20 KOYO

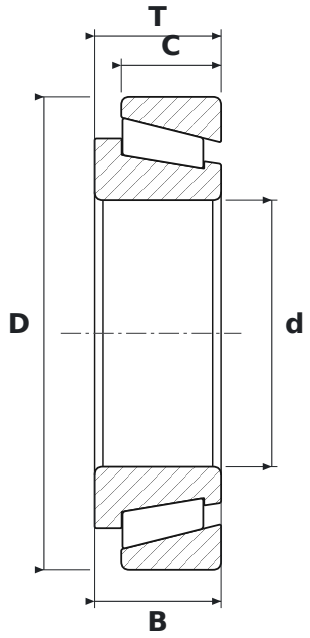

DIMENSIONS

d	bore diameter	**63.5 mm**
D	outside diameter	**112.71 mm**
T	total width	**30.16 mm**
B	inner ring width	**30.16 mm**
C	outer ring width	**23.81 mm**

SPECIFICATIONS

Manufacturer	**KOYO**
Manufacturer designation	**39585/20**
B – inner ring width	**30.16 mm**
C – outer ring width	**23.81 mm**
Rolling elements	**tapered roller bearing**
Seal	**open – no seals**