Tapered roller bearing 3982/3920/2 Q SKF

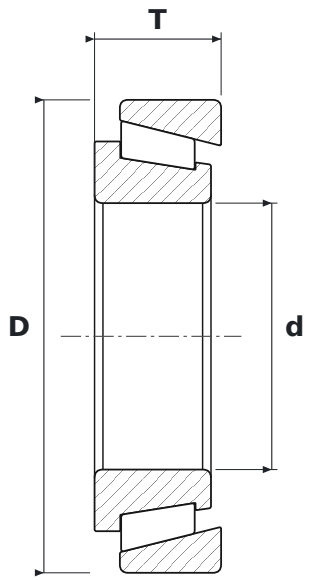

DIMENSIONS

d	bore diameter	**63.5 mm**
D	outside diameter	**112.71 mm**
T	total width	**30.16 mm**

SPECIFICATIONS

Manufacturer	**SKF**
Manufacturer designation	**3982/3920/2 Q**
Rolling elements	**tapered roller bearing**
Seal	**open – no seals**