Tapered roller bearing 3984/2/3920/2 Q SKF

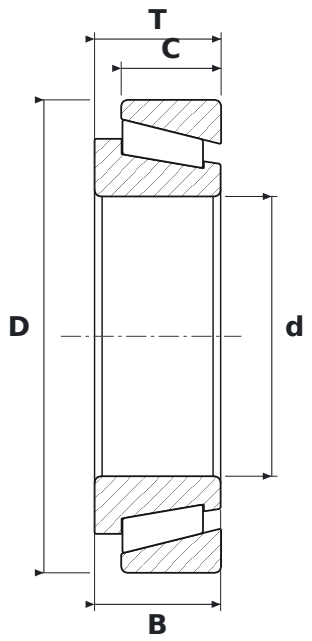

DIMENSIONS

d	bore diameter	**66.68 mm**
D	outside diameter	**112.71 mm**
T	total width	**30.16 mm**
B	inner ring width	**30.05 mm**
C	outer ring width	**23.81 mm**

SPECIFICATIONS

Manufacturer	**SKF**
Manufacturer designation	**3984/2/3920/2 Q**
B – inner ring width	**30.05 mm**
C – outer ring width	**23.81 mm**
Rolling elements	**tapered roller bearing**
Seal	**open – no seals**