Tapered roller bearing 4T-07087/07210 X NTN

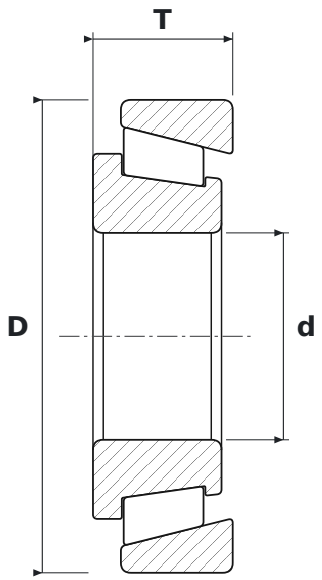

DIMENSIONS

d	bore diameter	**22.23 mm**
D	outside diameter	**50.8 mm**
T	total width	**15.01 mm**

SPECIFICATIONS

Manufacturer	**NTN**
Manufacturer designation	**4T-07087/07210 X**
Rolling elements	**tapered roller bearing**
Seal	**open – no seals**