Tapered roller bearing 4T-07100/07204 NTN

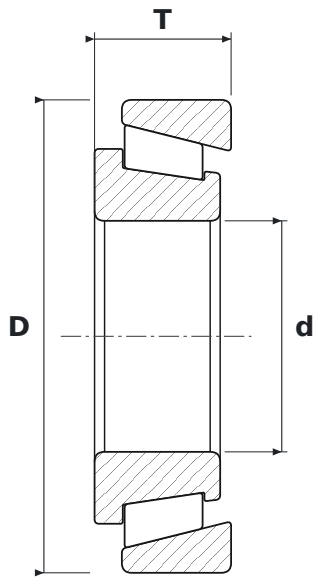

DIMENSIONS

d	bore diameter	**25.4 mm**
D	outside diameter	**51.99 mm**
T	total width	**15.01 mm**

SPECIFICATIONS

Manufacturer	**NTN**
Manufacturer designation	**4T-07100/07204**
Rolling elements	**tapered roller bearing**
Seal	**open – no seals**
Mass	**0.143 kg**