Tapered roller bearing 4T-13687/13621 NTN

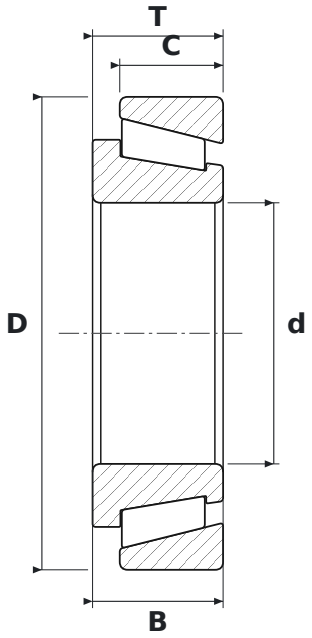

DIMENSIONS

d	bore diameter	**38.1 mm**
D	outside diameter	**69.01 mm**
T	total width	**19.05 mm**
B	inner ring width	**19.05 mm**
C	outer ring width	**15.08 mm**

SPECIFICATIONS

Manufacturer	**NTN**
Manufacturer designation	**4T-13687/13621**
B – inner ring width	**19.05 mm**
C – outer ring width	**15.08 mm**
Rolling elements	**tapered roller bearing**
Seal	**open – no seals**
Mass	**0.3 kg**