Tapered roller bearing 4T-14137A/14276 NTN

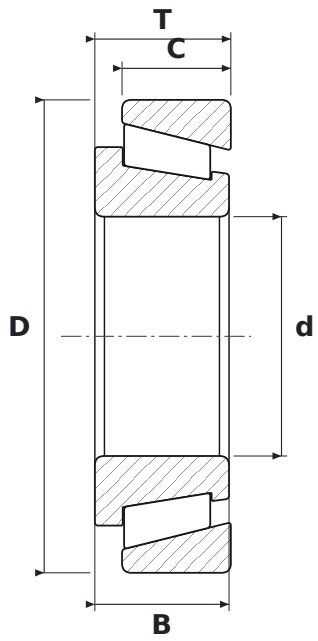

DIMENSIONS

d	bore diameter	**34.93 mm**
D	outside diameter	**69.01 mm**
T	total width	**19.85 mm**
B	inner ring width	**19.58 mm**
C	outer ring width	**15.88 mm**

SPECIFICATIONS

Manufacturer	**NTN**
Manufacturer designation	**4T-14137A/14276**
B – inner ring width	**19.58 mm**
C – outer ring width	**15.88 mm**
Rolling elements	**tapered roller bearing**
Seal	**open – no seals**