Tapered roller bearing 4T-15123/15245 NTN

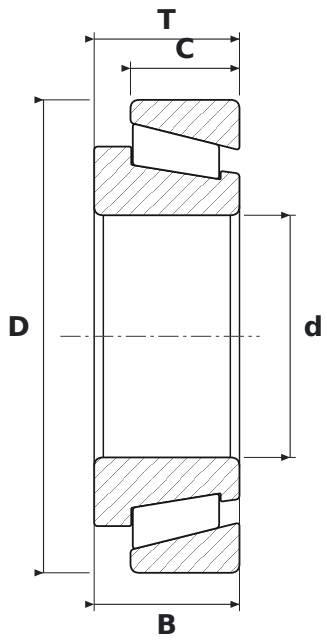

DIMENSIONS

d	bore diameter	**31.75 mm**
D	outside diameter	**62 mm**
T	total width	**19.05 mm**
B	inner ring width	**19.05 mm**
C	outer ring width	**14.29 mm**

SPECIFICATIONS

Manufacturer	**NTN**
Manufacturer designation	**4T-15123/15245**
B – inner ring width	**19.05 mm**
C – outer ring width	**14.29 mm**
Rolling elements	**tapered roller bearing**
Seal	**open – no seals**