CASTOMER

DATASHEET

Tapered roller bearing 4T-16150/16284 NTN

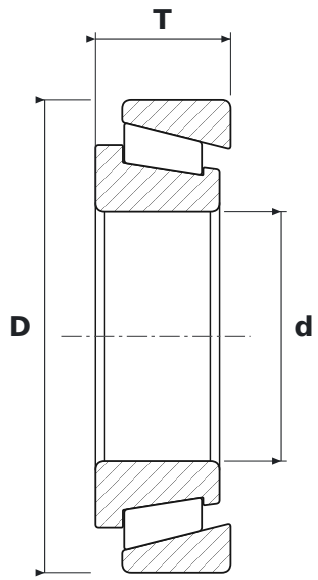

DIMENSIONS

d	bore diameter	**38.1 mm**
D	outside diameter	**72.24 mm**
T	total width	**20.64 mm**

SPECIFICATIONS

Manufacturer	**NTN**
Manufacturer designation	**4T-16150/16284**
Rolling elements	**tapered roller bearing**
Seal	**open – no seals**
Mass	**0.361 kg**