Tapered roller bearing 4T-25590/25523 NTN

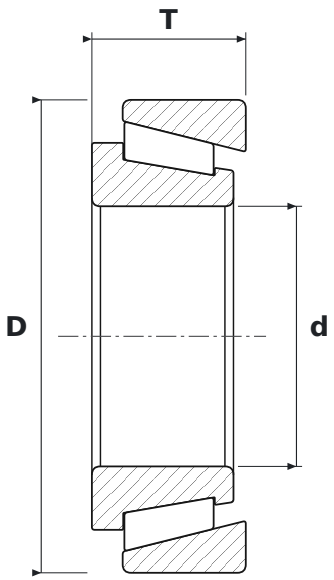

DIMENSIONS

d	bore diameter	**45.62 mm**
D	outside diameter	**82.93 mm**
T	total width	**26.99 mm**

SPECIFICATIONS

Manufacturer	**NTN**
Manufacturer designation	**4T-25590/25523**
Rolling elements	**tapered roller bearing**
Seal	**open – no seals**
Mass	**0.601 kg**