CASTOMER

DATASHEET

Tapered roller bearing 4T-2788/2735 X NTN

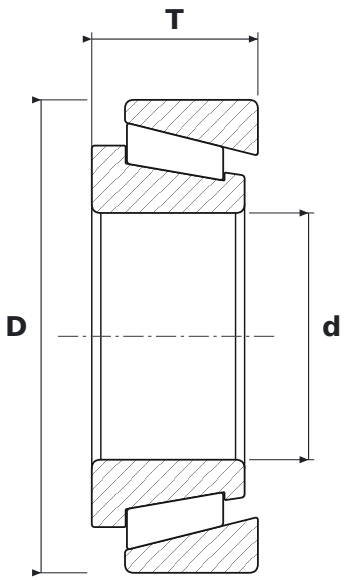

DIMENSIONS

d	bore diameter	**38.1 mm**
D	outside diameter	**73.03 mm**
T	total width	**25.65 mm**

SPECIFICATIONS

Manufacturer	**NTN**
Manufacturer designation	**4T-2788/2735 X**
Rolling elements	**tapered roller bearing**
Seal	**open – no seals**