Tapered roller bearing 4T-30313 NTN

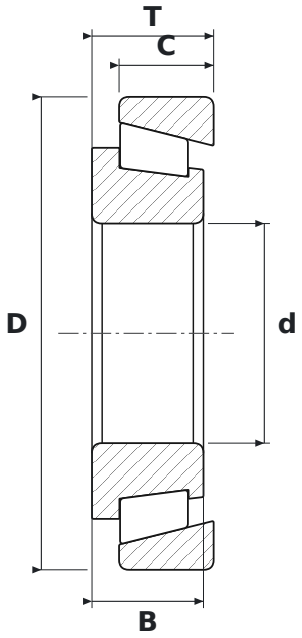

DIMENSIONS

d	bore diameter	**65 mm**
D	outside diameter	**140 mm**
T	total width	**36 mm**
B	inner ring width	**33 mm**
C	outer ring width	**28 mm**

SPECIFICATIONS

Manufacturer	**NTN**
Manufacturer designation	**4T-30313**
B – inner ring width	**33 mm**
C – outer ring width	**28 mm**
Rolling elements	**tapered roller bearing**
Seal	**open – no seals**
Mass	**2.5 kg**