Tapered roller bearing 4T-32204 NTN

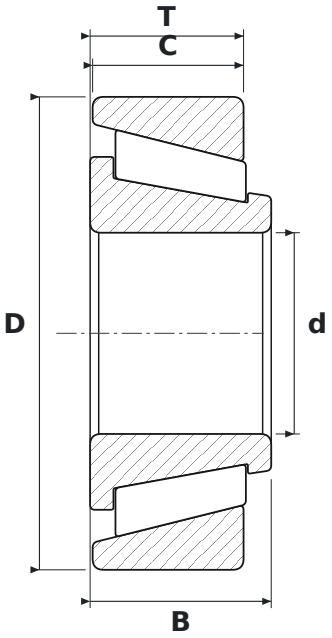

DIMENSIONS

d	bore diameter	**20 mm**
D	outside diameter	**47 mm**
T	total width	**15.25 mm**
B	inner ring width	**18 mm**
C	outer ring width	**15 mm**

SPECIFICATIONS

Manufacturer	**NTN**
Manufacturer designation	**4T-32204**
B – inner ring width	**18 mm**
C – outer ring width	**15 mm**
Rolling elements	**tapered roller bearing**
Seal	**open – no seals**